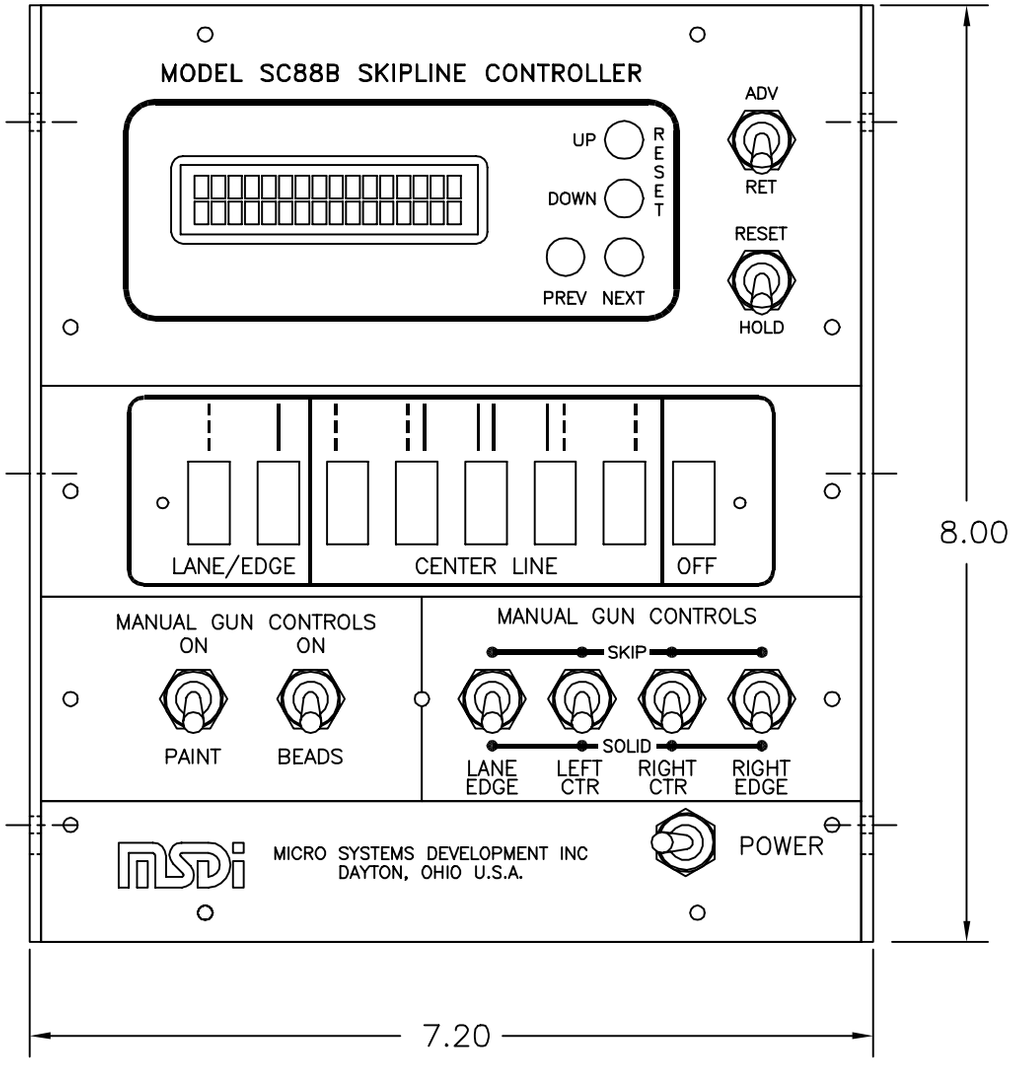

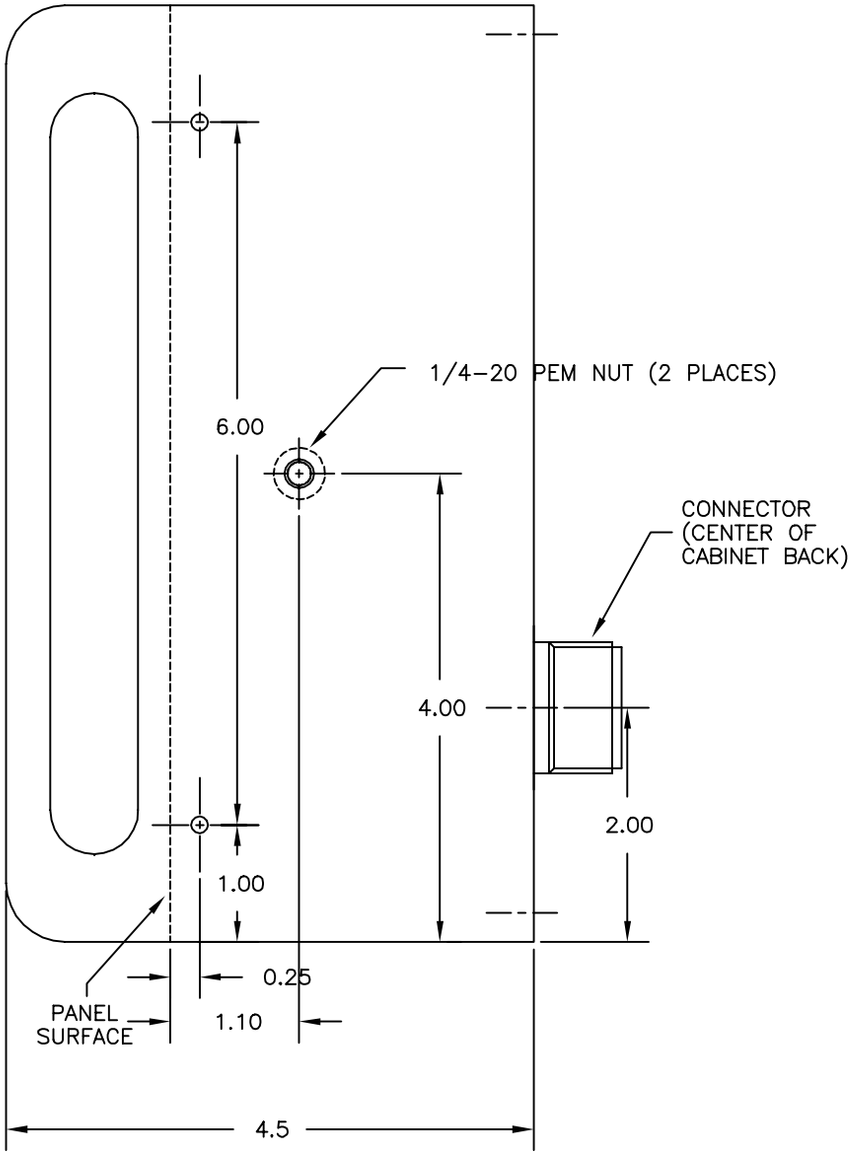

SC88 CONTROL UNIT MOUNTING DIMENSIONS
12-13-93 REV 8-18-97